DEVELOPMENT OF NEXT-GENERATION ORNITHOPTER PROTOTYPES

John Wood, Daniel Jensen, Peter Leetsma, Christopher Gurrola, Daniel Zheng, Matthew Sparta and Richard Culver,[*]

Timothy Philpot[†]

Michael VanOverloop, Kris Wood[**]

An "Ornithopter" is flying machine that uses an insect or bird type flapping wing motion to develop required lift and thrust. In comparison with fixed-wing or rotary-wing machines, ornithopters offer potential advantages that include increased maneuverability, lower power consumption, higher adaptability to varying situations, and the ability to hover. The simple flapping motion used in existing commercial ornithopter micro air vehicles occurs only in the plane that is perpendicular to the vehicle fuselage; however, birds and insects flap their wings in a more complicated pattern. For example, a hummingbird is able to hover by flapping its wings up and down, sweeping its wings forward and backward, and twisting its wings to vary their angle of attack. This paper describes a project to develop ornithopter flapping mechanisms that produce wing motions approaching those of the hummingbird. The feasibility and effectiveness of several mechanisms are evaluated. This paper will also describe prototypes of the ornithopter mechanism and present the results of testing.

INTRODUCTION

The research goal for this project was to investigate the use of both virtual and physical prototypes that could be used for the study of ornithopter wing motion. A biological ornithopter (bird) is a flying system that uses complex 3-axis wing rotational motion to produce both lift and thrust. The project involved research into the design requirements necessary to produce an accurate simulation of the 3D motion followed by development of virtual prototypes and concluding with physical bench testing of two mechanisms developed to produce the bird-like wing motion. The goal was to build a prototype mechanism that could move in two or three degrees of freedom actively, in order to more effectively mimic a bird's flapping motion, in this case, a hummingbird's. The project was funded by Air Force Research Labs (AFRL) at Wright-Patterson Air Force Base

[*] Dept of Engineering Mechanics, US Air Force Academy, 2354 Fairchild Drive USAF Academy CO 80840, 719-333-2531, dan.jensen@usafa.edu

[†] Visiting Professor, Dept of Engineering Mechanics, US Air Force Academy.

** Dept. of Mechanical Engineering, Univ. of Texas, Austin, TX

(AFB), Ohio. The goal of the project was to design, manufacture and deliver workable bench test models that simulate a hummingbird's wing beat.

DERIVING PROTOTYPE REQUIREMENTS

Hummingbirds use a unique wing motion to produce flight characteristics. Not only do they flap at a much higher rate than normal birds, but their wings are also structurally rigid in certain segments and certain degrees of freedom. The wing flap involves rotational motion in an elongated figure-8, generating lift on both the forward and backward sweep, with a required rotation about the longitudinal axis of the wing to effect a change in the angle-of-attack from forward sweep to backward sweep (Figure 1). The emulation of this natural system began with research into the physiology and anatomy of hummingbirds with a focus on the configuration of the connections of the hummingbird's muscles to its wings, as well as the actual path that the wingtips travel.

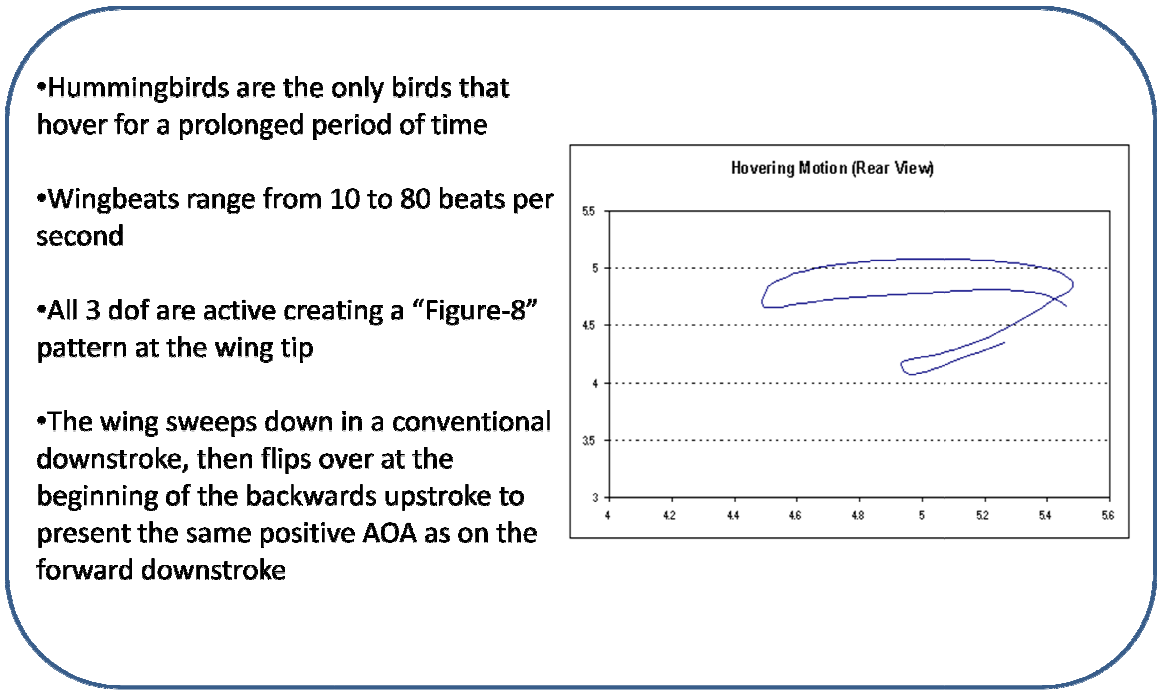

Figure 1: Hummingbird Flight Characteristics [1, 2, 3]

The path of the wingtips provided a logical starting point for the study as this serves as a final verification of the accuracy of the prototype performance. Concepts generated to attempt to replicate the motion could be evaluated on their ability to accurately reproduce the motion and speed of the wing using both virtual and physical prototypes.

Defining the Problem

The first step in the design process is to identify the customer needs. We identified our main customer as the Air Vehicles Directorate of Air Force Research Labs (AFRL/RB). We used a variety of methods to collect information. One method was face-to-face interviews with AFRL/RB via a video teleconference. Another method was the distribution of surveys to engi-

neers at AFRL/RB. From these different methods, we developed the customer needs (design requirements) which would guide our project. The first customer needs relate to each of the three DOFs; 120° (+/- 60^0) of flapping motion, 80°(+/- 40^0) of sweeping motion, and 60° (+/- 30^0) of either active or passive twisting motion. The final customer need we determined is that the mechanism would need to be capable of maintaining a constant frequency of at least 15 Hz while being able to vary the amplitude. Table 1 below summarizes these customer needs.

Table 1: Design Requirements

Customer Needs	
Flap	120°
Sweep	80°
Twist	60°
Frequency	15 Hz

Generating Concepts to Satisfy the Design Requirements

After developing the customer needs (design requirements) for the project, we focused on generating concepts. We investigated other universities' and individuals' research into developing ornithopters [1,2,4]. Because very few solutions have been proposed for 2 or 3 degree of freedom motion for these systems, we also employed a variety of techniques for generating completely new solutions for the problem. One of these techniques is called functional decomposition. Functional decomposition is a method that helps designers describe *what* a product will be required to do (functions), *not* *how* it will accomplish these tasks (embodiment). There are a number of different ways to accomplish this functional decomposition with common methods including function trees and function structures[5]. Functional decomposition combines with morphological analysis to provide a method for organizing potential embodiments for each function.

Another concept generation method we employed is a modified brainstorming technique. In the classic method of "brainstorming," a small group of people openly discuss possible new solutions to an existing problem or conceptual solutions for new design problems. While this method may be effective in some forums, it has been shown in some design situations to lack the synergistic effect that is desired. Specifically, it has been determined in some situations that the group will not produce more quantity or quality of solutions in this "brainstorming" environment then a group of individuals working alone[6]. This finding has led many in the design community to the use of a modified brainstorming technique called 6-3-5, which is described graphically in Figure 2. In this technique, a small design team (approximately 6 members) each takes the initial 5-15 minutes of the exercise to develop a small number of concepts intended to solve a design problem. These ideas are captured through a combination of sketches and words. Optimally, large sheets of paper and different colored markers are provided for each participant. After this initial 5-15 minutes, participants pass their paper to the adjacent team member. An additional 5-10 minutes are now provided for the members to add to/comment on the ideas of their colleague, or create an entirely new idea as inspired by the sketches passed to them. This rotational process continues until each member has taken the opportunity to add to the concepts from all other members. No verbal communication is allowed during this entire process until all team members obtain their original concept sheet.

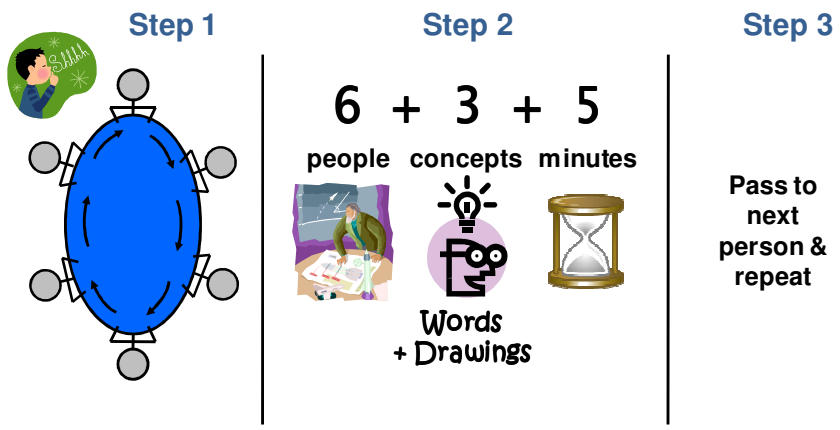

Figure 2: 6-3-5 Concept Generation Process[5]

In our particular case, we have combined the 6-3-5 technique with Morphological Analysis and implemented the method following a function structure type functional decomposition of the problem. The ideas developed from 6-3-5 were arranged in a morphological matrix based on how they met certain functions.

The concept generation methods utilized produced many different concepts. In order to evaluate and compare each of these preliminary designs, we used a Pugh Chart (Figure 3). We implemented this decision matrix type tool using the criteria of variable amplitude, sweeping motion, flapping motion, active twist, constant frequency, durability, feasibility, ability to facilitate test stand analysis, small size, ease of coordination, and finally how easy the design is to control. These criteria and their assigned weights were drawn from the customer needs and the surveys which had already been completed. Each of the preliminary designs was compared to a datum on a scale from -5 to 5 for each criterion. These weighted scores were added up, giving a total score for each design. After completing all of the calculations, it was clear that the Two-Wheel (Disk-Rocker), Oscillating Wheel (slotted gear and wheel), and Linear Actuator mechanism were superior to the other four mechanisms. The Four-Bar design, although not a top finisher was maintained as a viable concept due to the relative ease of prototyping.

Customer Needs	Customer Needs Weight	Datum: Two Wheel	Concept Variant #1: Slotted Gear and Wheel	Concept Variant #2: Four Bar	Concept Variant #3: Ball and Wheel	Concept Variant #4: Electromagnet	Concept #5: Linear Actuator	Concept #6: Cam and Follower
Variable Amplitude	5.00	0	2	-3	3	1	3	2
Sweeping Motion	4.67	0	0	-1	1	1	2	-4
Flapping Motion	5.00	0	0	0	-1	1	0	2
Active Twist	3.00	0	-3	1	1	1	1	-2
Constant Frequency	5.00	0	0	0	-3	-3	-4	1
Durablility	4.33	0	3	-3	-2	1	1	-1
Feasability/Potential for Development	5.00	0	-1	-2	-3	-4	1	0
Facilitate Test Stand Analysis	4.33	0	0	1	0	0	0	0
Small Size	3.67	0	-1	-1	2	1	-1	-1
Ease of Coordination	4.00	0	1	2	-3	-3	0	1
Computer Controlled	4.67	0	-1	2	-3	-4	-3	0
	Rating	**0.00**	**4.67**	**-21.67**	**-39.67**	**-40.00**	**-1.00**	**-3.67**

Figure 3: Pugh Chart for Differentiating Different Concepts

DEVELOPING THE PROTOTYPES

The prototyping strategy used involved both virtual and physical prototypes. The virtual prototypes were specifically SolidWorks dynamic animations of the kinematic systems. The physical prototypes were built using a layered thermoplastic rapid prototype technology. Two mechanisms were selected for prototyping (Disk-Rocker Mechanism and Modified Four-Bar Mechanism) and a third and fourth for preliminary analytical analysis (linear actuators and electromagnetic drive).

Concept 1 – Disk-Rocker Mechanism

The Disk-Rocker mechanism stemmed from the realization that single degree of freedom ornithopter models often rely on the rotational movement, either single direction or oscillating, of a disc (gear or wheel) to actuate the flapping wing motion. The rotating disk contains a pin device that allows relative linear motion of a slotted bar (wing spar) with respect to the pins' frame of reference. The disk rotation translates into wing flapping motion in the vertical plane with rotation of the wing spar at a fixed shoulder point and about an axis parallel to the ornithopter centerline as shown in the Figure 4 below.

Figure 4: Front View - Single Degree of Freedom Ornithopter[7]

The typical ornithopter design described above is limited to rotation about a single axis which prohibits the ability to couple this required flapping motion with a forward and backward sweeping motion that is also necessary to imitate real ornithopter flight. Initial concept generation studies have shown the feasibility of incorporating both of these required wing rotations in a coupled system by using an oscillating second disk to actuate the forward and backward sweeping motion. This second disk also uses a pin device that allows relative linear motion of the same slotted bar with respect to the pins' frame of reference. The system requires a shoulder joint to constrain the wing spar to three degrees of freedom. The shoulder joint allows two degree of freedom rotational motion of the wing spar about both the vertical and longitudinal axes while constraining rotation about the lateral axis. The shoulder joint allows translation of the wing spar along the longitudinal axis of the spar but prohibits translation in the remaining two orthogonal directions. The conceptual design is illustrated below (Figure 5).

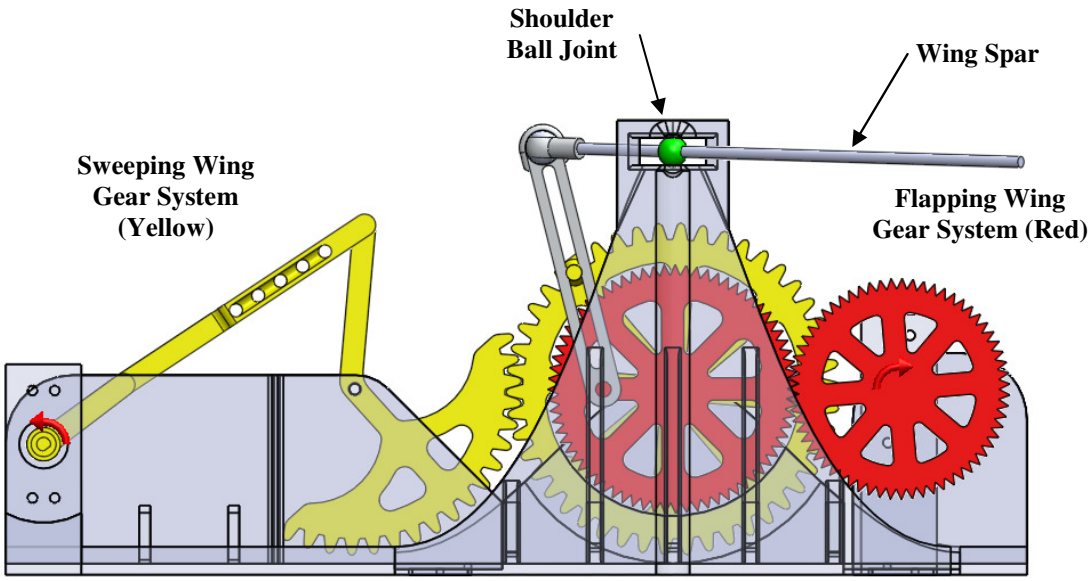

Figure 5: Disk-Rocker Concept

As shown in the Disk-Rocker concept diagram, two independent motions are coupled through the slotted bar and its interface with the two driving disks shown as gears in this diagram. The third degree of freedom is dependent on the position of the slotted bar in relation to the two disks. Although all three degrees of freedom are attained, the twisting degree of freedom occurs passively (without direct control) and is intrinsically linked to the motion of the sweep and flapping degrees of freedom. It is not required that the twist motion be controlled, however, the ability to actively control that range of motion would greatly enhance the feasibility of the model, as real ornithopters are able to control the twist of their wings to change their flight characteristics. This conceptual design was then virtually prototyped through the use of 3D modeling software (SolidWorks) and also physically prototyped to demonstrate the feasibility of the design concept.

Disk-Rocker Mechanism Virtual Prototype

The initial design was created in SolidWorks to realize the feasibility of the mechanism design as shown in the diagram above. Computer simulations confirmed that the ornithopter mechanism would essentially meet all required degrees of freedom and their necessary associated ranges. The diagrams below show the results of the virtual prototype. Figure 6 illustrates the results of the flapping wing motion when the sweeping wing motion is held fixed resulting in single degree of freedom rotation, typical of current flapping wing models. Figure 7 illustrates the results of the sweeping wing motion when the flapping wing motion is held fixed resulting in the remaining two degree of freedom motion.

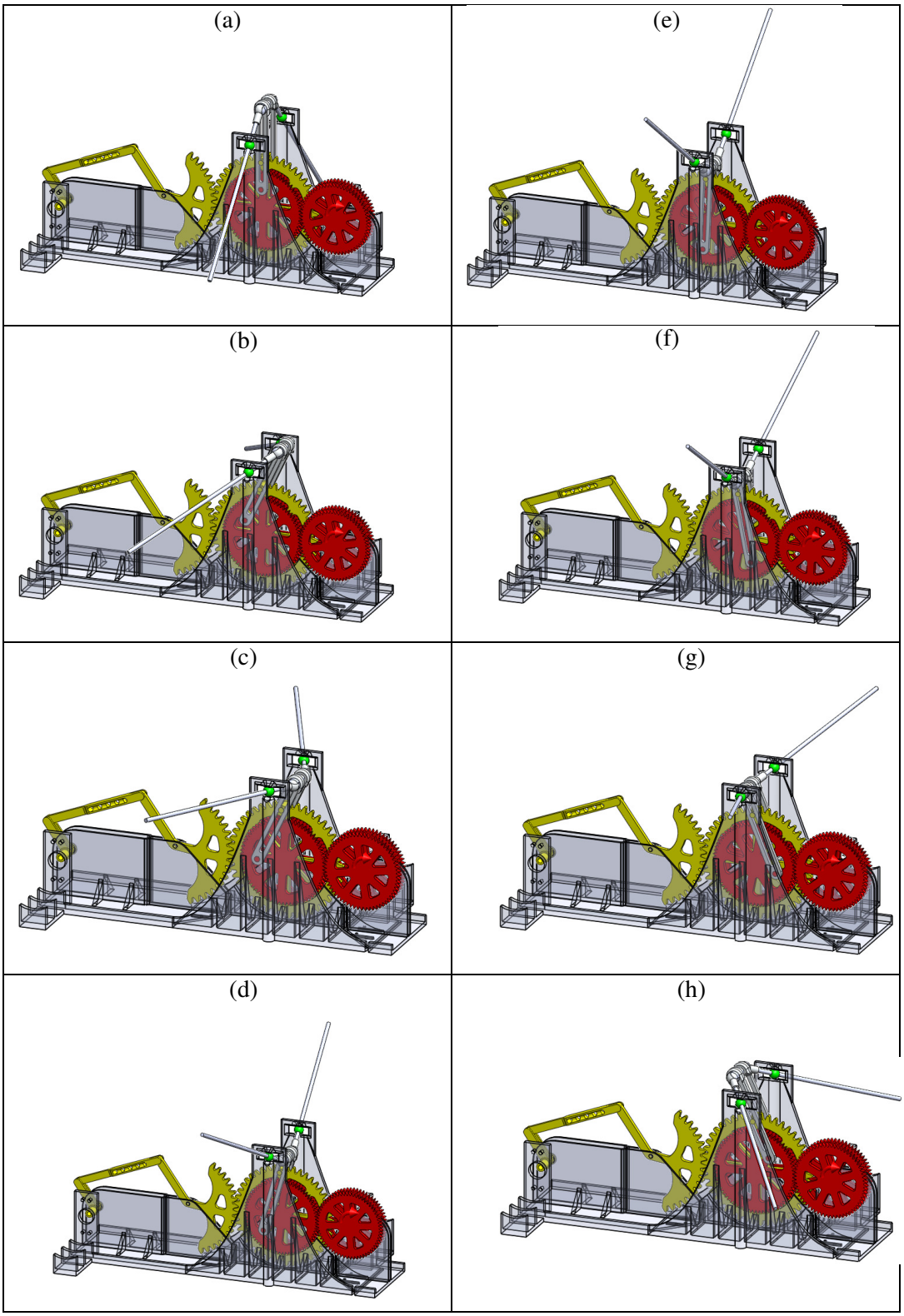

Figure 6: One Degree of Freedom Flapping Motion

(Sweeping Wing Gear System Fixed)

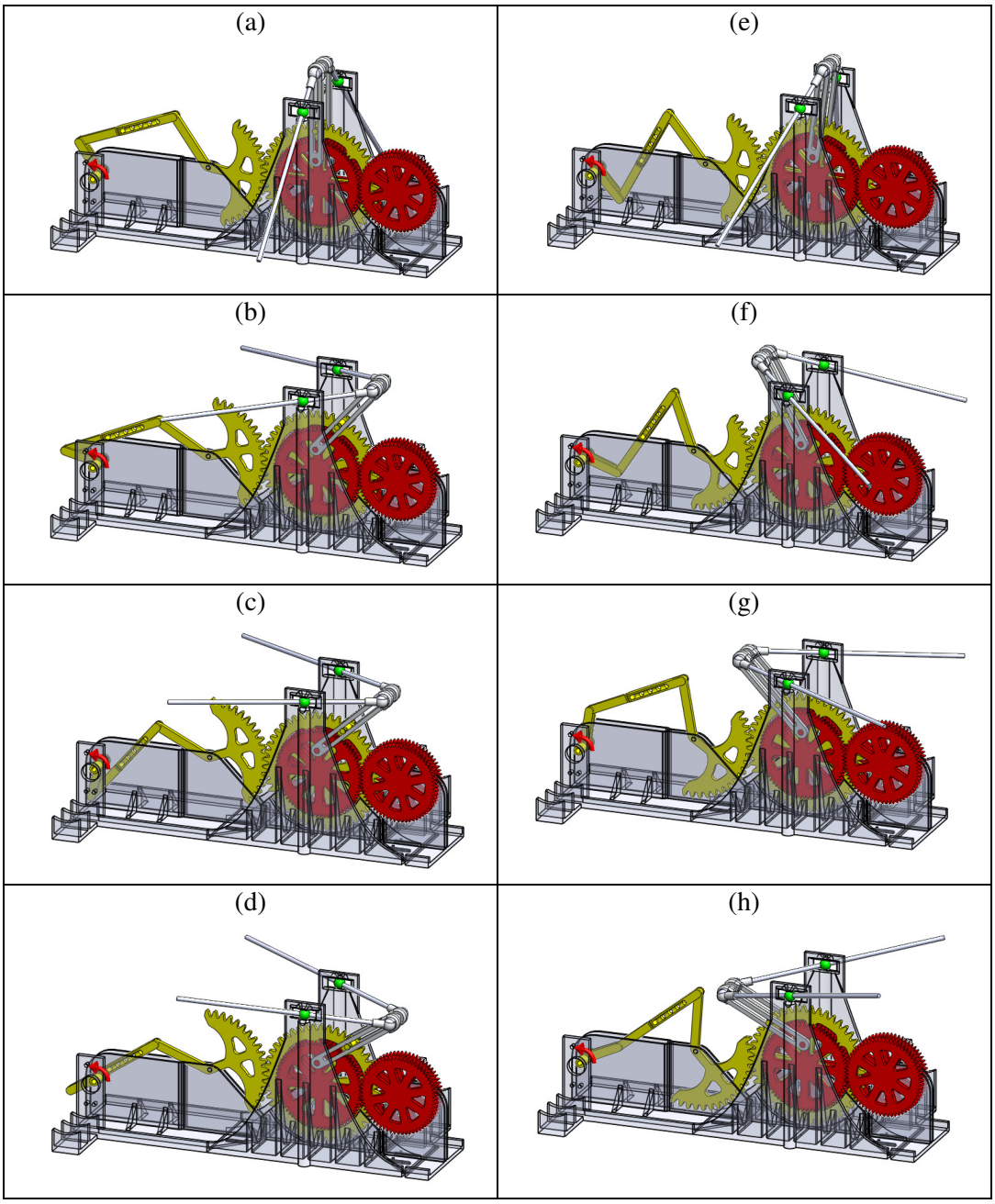

Figure 7: Two Degree of Freedom Sweeping Motion

(Flapping Wing Gear System Fixed)

Although the model demonstrates that the motion requirements are met by the model, one fault is that at the greatest positions of wing tip deflection, the wing spar is actually shorter than at the neutral position because the spar slides through the ball joint at the "shoulder" of the ornithopter mechanism. Once the computer model was finished it was submitted to GrowIt®, a rapid prototyping company that allowed for time and cost-effective production of the mechanism.

Disk-Rocker Mechanism Physical Prototype

Physical prototyping plays a critical role in the development of conceptual designs. The ability to produce prototypes quickly (rapid prototyping) and cost effectively provides an additional tool for the visualization, modification and refinement of mechanisms involving relative motion between components. In the case of the Disk-Rocker concept, the virtual prototype worked essentially as expected. However, practical aspects such as gravity, momentum, friction, and other phenomena affect the system while it is operating.

The first prototype we fabricated quickly demonstrated the need to pursue subtle design changes. The rapid-prototyped model was modified to accept a small 9V DC electric motor to drive both the flapping wing gear system and the sweeping wing gear system. Because of the low strength properties of the gear teeth, repeated failures occurred due to the difficulty of overcoming friction between the mechanism components. Key changes were made to reduce the load on the structure, primarily by removing mass from the moving parts in ways that would not greatly affect their structural integrity. After the final design changes were made the mechanism was able to sustain flapping and sweeping motions up to 4.5 Hz. This demonstrated that plastic prototypes were feasible for demonstrating the physical motion necessary to meet design requirements, however the material selection process would be essential in producing a mechanism that can sustain a minimum of 15 Hz. The final rapid-prototyped assembly is shown below with the electric motors removed for clarity.

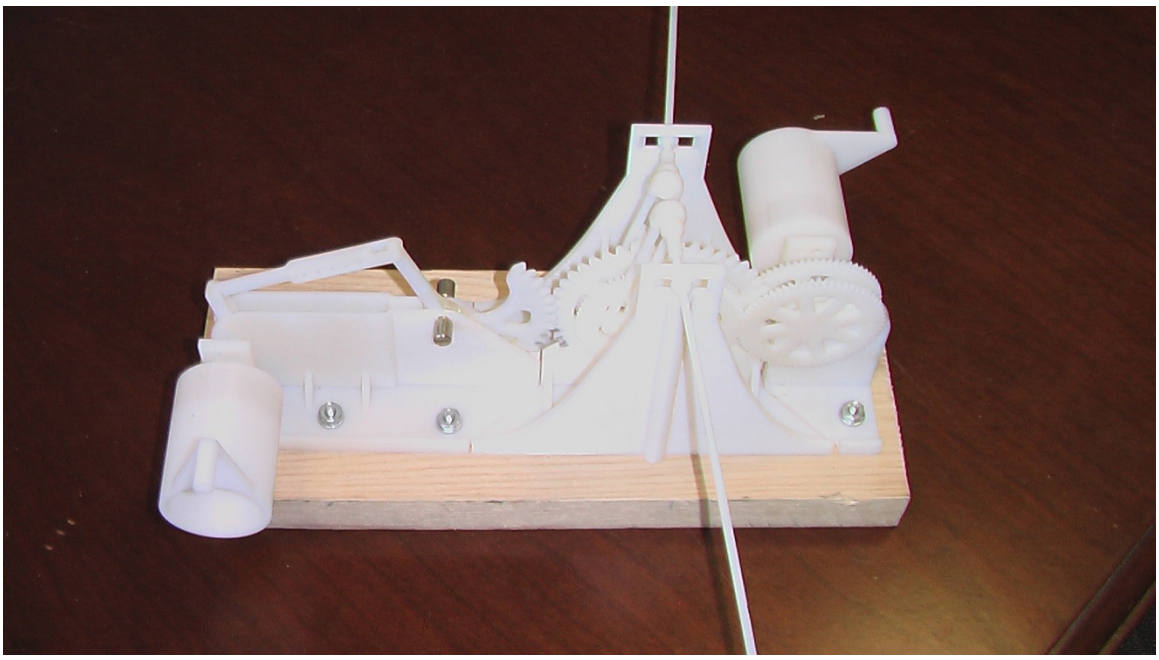

Figure 8: Disk-Rocker Mechanism Physical Prototype

An issue observed during the experimentation with the plastic prototype, especially at higher speeds, is the fatigue life. During testing of the oscillating disk, a fine dust was observed from joints due to material wear. Based on experience with metal mechanisms' frictional characteristics, it is likely that using metal parts will be the next implementation in the manufacturing process to attain the desired frequency of 15 Hz in all degrees of ornithopter wing motion.

Concept 2 – Modified Four-Bar Mechanism

The Modified Four-Bar Mechanism draws its inspiration from the use of a four-bar system. The four-bar system, as shown below, is a single degree of freedom system that can allow translational motion in two directions (Long and Vert) and rotational motion about an orthogonal axis (Lat). Regardless of the multiple directions of motion possible, the system can still be completely defined by a single angle (e.g. θ_A shown in Figure 9 below). The only exception occurs when segment length ***ab*** and ***cd*** are of equal length in which case a bifurcation can occur resulting in two possible configurations with a single angle.

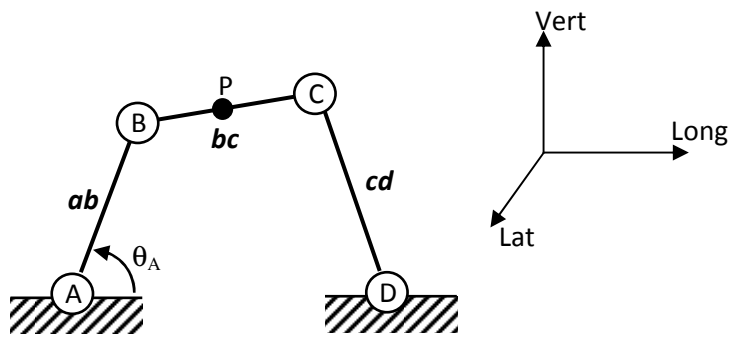

Figure 9: Four-Bar Linkage System

In order to increase the level of prescribed motion of the wing spar structure from single degree of freedom motion, bar ***da*** was disconnected and pivots A and D attached to rotation disks as shown below.

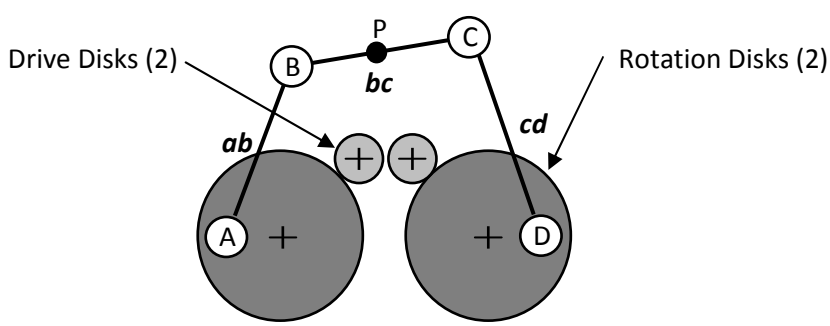

Figure 10: Modified Four-Bar Linkage System

Next the system was modified to include a symmetrical set of driving disks to provide rotational motion of the rotation disks containing pivots A and D. The driving disks can rotate in either direction to affect the desired rotation and translation of the wing spars. The system does require a shoulder joint for the wing spar, similar in design and function to the previous concept, to constrain the wing spar to the desired three degrees of freedom. The shoulder joint allows two degree of freedom rotational motion of the wing spar about both the vertical and longitudinal axes while constraining rotation about the lateral axis. The shoulder joint allows translation of the

wing spar along the longitudinal axis of the spar but prohibits translation in the remaining two orthogonal directions. The conceptual design of the shoulder mechanism is illustrated below.

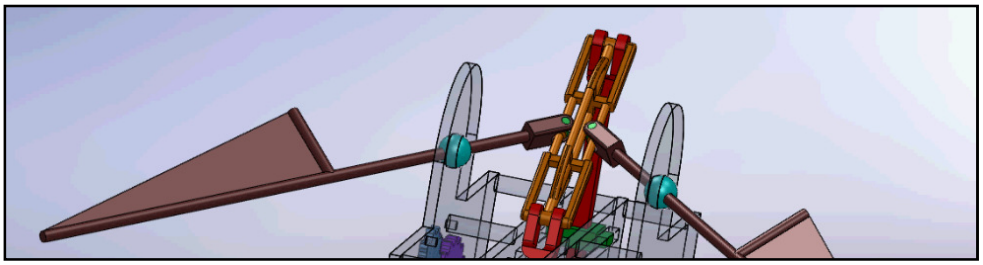

Figure 11: Modified Four-Bar Mechanism

Through manipulation of the rotation direction and relative position of the two rotation disks, the desired coupled flapping and sweeping wing motion can be achieved. Two fundamental modes of flight have been successfully modeled: hovering mode which requires the rotation disks to rotate in opposite directions, and forward flight mode, which requires the rotation disks to rotate in the same direction. Forward flight can therefore be achieved using a single drive disk to rotate both rotation disks. The conceptual design was then virtually prototyped through the use of 3D modeling software and physically prototyped to demonstrate the feasibility of the design concept.

Modified Four-Bar Mechanism Virtual Prototype

The initial design was created in SolidWorks to realize the feasibility of the mechanism concept. Once the entire model was created, motion studies were conducted to create the necessary wing flapping and sweeping motion. The virtual model offered clear visual evidence that the model proposed was in fact capable of the motions needed for an ornithopter.

The hover flight mode configuration consists of two drive disks that independently drive each rotation disk in an opposite direction but at the same rotation speed. The motion requires pivot points A and D to be synchronized at the 3 o'clock position at the start of motion. Based upon the linkage configuration the rotation disks will also be synchronized when they each reach the 9 o'clock position as well. The disks will, however, be 180 degrees out of synchronization when they reach the 6 o'clock and 12 o'clock positions. As a result, the rotation disks will be synchronized twice per revolution. Figure 12 below illustrates the results of the virtual prototype hover flight motion. The illustrations show that the wing spar achieves a positive angle-of-attack for ½ of the revolution and a negative angle-of-attack for ½ of the revolution. This motion equalizes the forward and reverse forces generated by the wing while maximizing the vertical force component allowing the wings to achieve a hover position.

The forward flight mode configuration consists of two drive disks that independently drive each rotation disk in the same counter clockwise direction at the same rotation speed. As stated above, this motion can be achieved using a single drive disk. The virtual prototype was modeled using this single disk configuration for simplicity. The motion requires pivot point D to be 90 degrees ahead of pivot point A for the entire motion. Figure 13 below illustrates the results of the virtual prototype forward flight motion. The illustrations show that the wing spar achieves a negative angle-of-attack for the majority of the revolution thereby producing the necessary forward thrust allowing the wings to achieve forward flight through a complex coupling of wing flapping and sweeping.

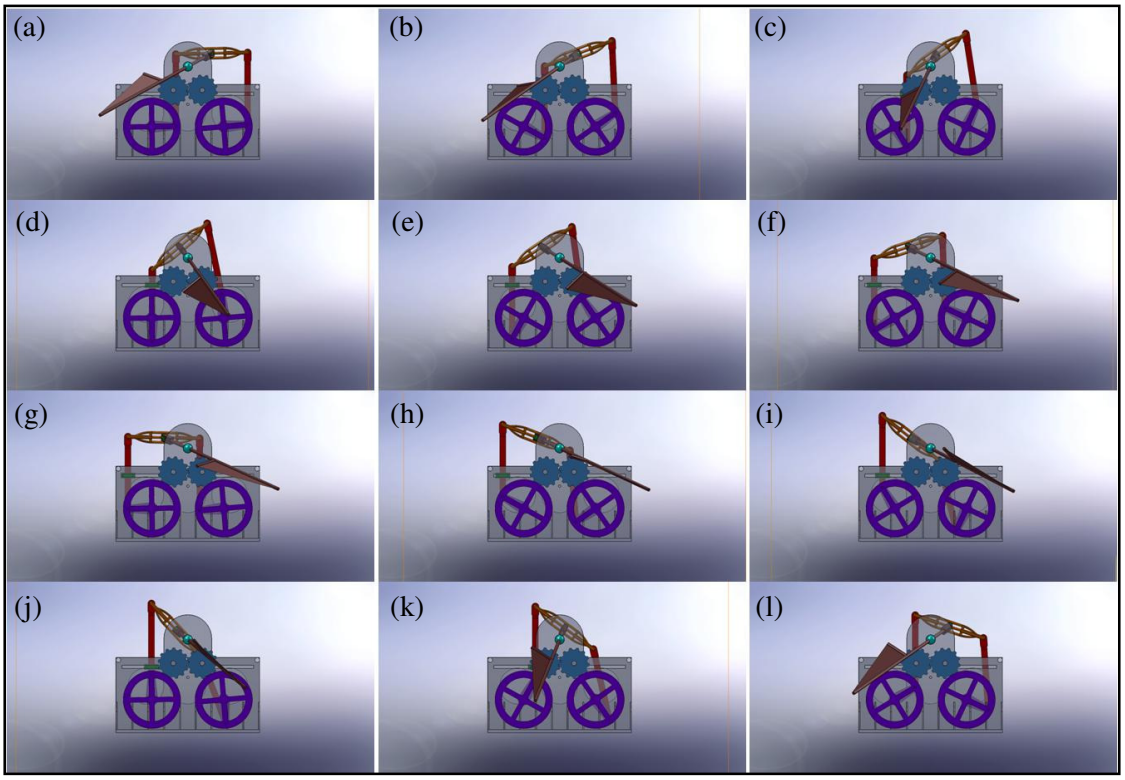

Figure 12: Hover Flight Mode

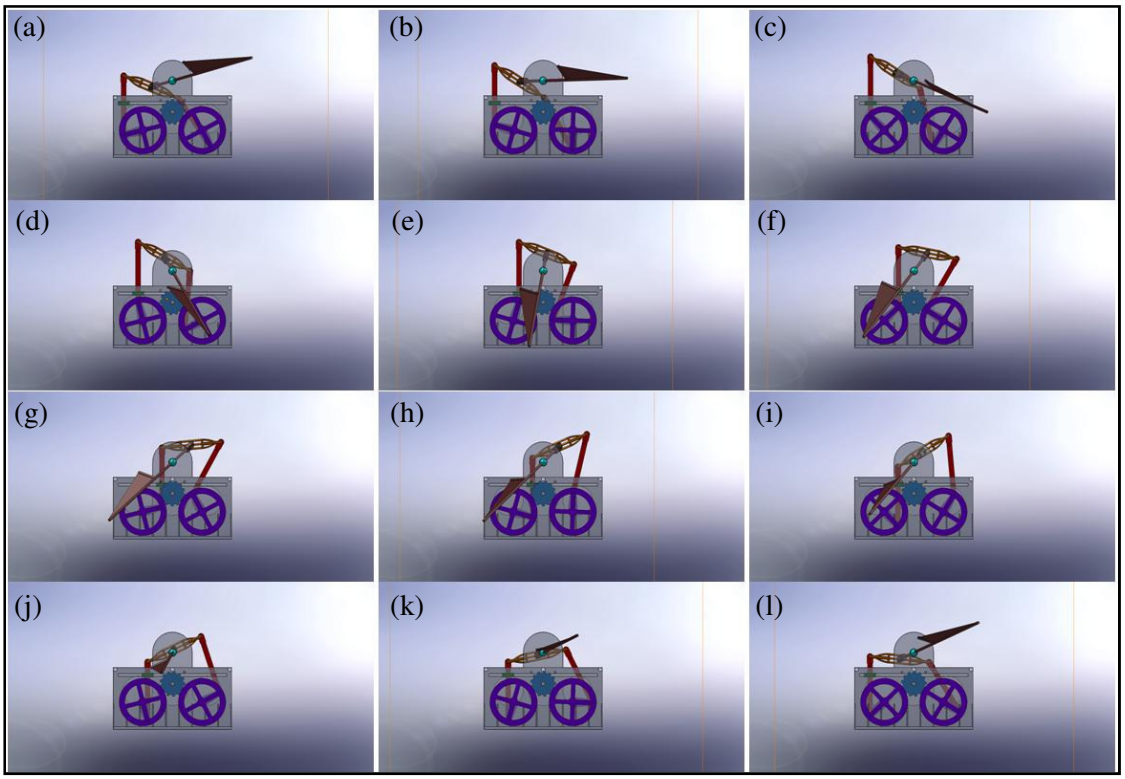

Figure 13: Forward Flight Mode

Modified Four-Bar Mechanism Physical Prototype

The challenge of physical prototyping involves the refinement and modification of the initial design. While the design functioned correctly in a virtual prototype using SolidWorks, practical aspects such as gravity, momentum and friction act on the physical system while it is operating; the system must be able to handle these stresses. The model was literally "beefed up" in crucial locations and lightened in others to minimize inertial forces. Various tolerances were also adjusted to increase functionality. Practical aspects such as a lever to drive the wheel were also put into place. Figure 14 shows the physical prototype.

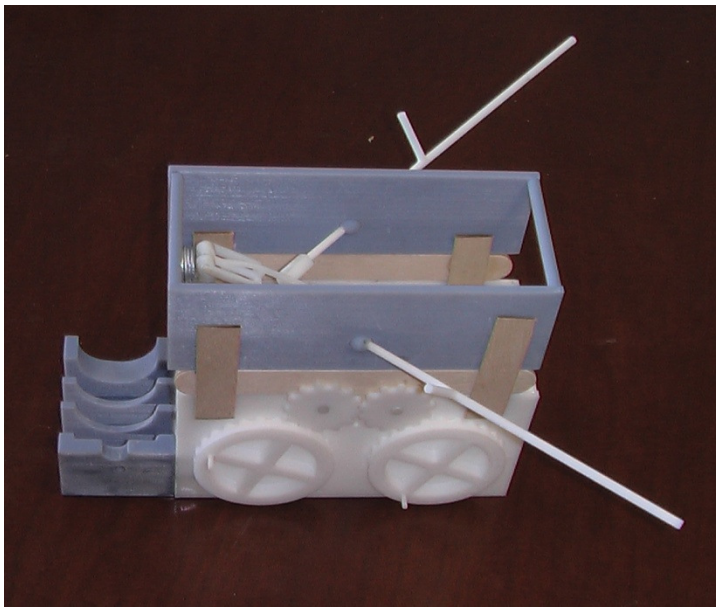

Figure 14: Modified Four-Bar Physical Prototype

SUGGESTIONS FOR FURTHER STUDY

Linear Shaft Mechanism

An alternative design concept is the linear shaft design. This design seeks to solve the wing motion problem by attempting to mimic the functional structure of a bird wing as opposed to trying to mimic the motion of the wing. Birds flap their wings using a system of muscles and tendons attached to bones that comprise the main structure of the wing. This proposed design uses two linear shaft motors and a standard rotary pager motor to control all three degrees of freedom.

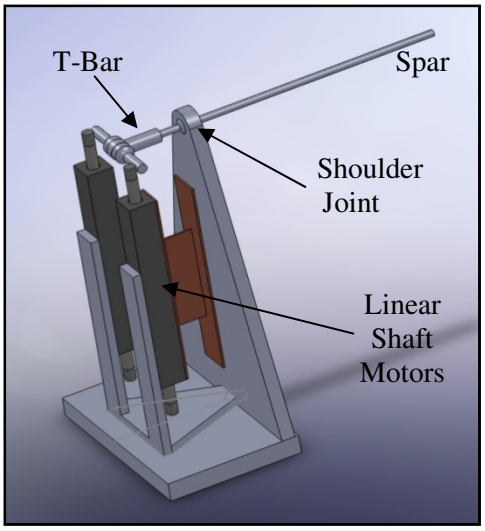

Figure 15: Linear Shaft Conceptual Design

The figure above illustrates conceptually how the wing flapping and sweeping motion could be developed. A ball and socket "shoulder" joint would be used to attach the wing spar to the "T-bar" that attaches to the two linear shaft motors. The linear shaft motors are capable of independent motion producing the active twisting motion of the T-bar and, thus, the wing spar. When both linear shaft motors move up and down together the flapping wing motion is produced. The entire assembly, including the T-bar and the linear shaft motors, rotate around a pivot point centered along the same axis as the ball and socket joint using a small pager motor to produce the wing sweeping motion.

Advances in piezoelectric actuators and linear shaft motors would greatly expand the design space for the linear shaft motor design concept. Currently, piezoelectric actuators do not meet design criteria outlined by the linear shaft design analysis because they are currently too big or do not meet velocity or displacement standards. If both velocity and displacement parameters are increased for piezoelectric actuators, while minimizing the size, there is promise for the design.

Electromagnetic Flight Research Mechanism

When researching propulsion methods to generate flapping motion, one idea that was generated was to use an array of electromagnets to move a central magnetized wing. The original idea was to use six electromagnets evenly spaced in a circle around a central wing shaft. This shaft was constrained on one end by a ball and socket joint. The wing would contain a permanent magnet to be attracted or repelled by the surrounding magnets, and could thus be controlled magnetically in the plane of the electromagnets to produce any orientation of the wing desired. By affixing one end with a ball and socket joint, located within the cylinder of influence the electromagnets contained or slightly below, the electromagnets would use lever motion to create any flap or sweep pattern that was programmed into the electrical domain controllers. This device would allow for the research of any wing flapping and sweeping motion, as there would be virtually no mechanical constraints on the motion. The model however, allows no direct control over wing rotation (twist). The research into this device has first focused on physical feasibility, or the ability of the electromagnet system to produce the required forces at the needed times, and the capability of electromagnetics to generate the continuous smooth motions required for flapping flight.

The development of the electromagnet option began by searching for previous examples of similar devices. In 1989, Yamaha received a patent (PN: 4801829; Electromagnetic Motor Without Mechanical Motion Converter) on a device designed to allow two dimensional motion control over a free floating central movable magnet. The original intent of this device was as an alternative means of converting electrical energy into mechanical motion. The device described is the fundamental unit of the proposed electromagnetic research device, a system that can control the position of a moving component in a 2D plane through the use of electromagnets.

The engineers at Yamaha describe some of their outputs in the text of the patent, indicating that small defined motion control using this device is possible. However their primary focus was the use of square waves and sine waves to achieve rectilinear and circular motion profiles. The patent does not describe any attempts to use the device for any more complex motions, like the near figure-eight of traditional flapping wing flight.

The electromagnetic prototype's hurdles to overcome presently exist primarily in the control domain, as many of the limitations of electromagnetic force generation can be compensated for by using the appropriate overall design including sufficient power and the geometry of the magnets. As an example, electromagnets beyond a certain size may begin to retain small amounts of magnetic flux for a short but non instantaneous amount of time after the current to the electromagnet has been removed. This means that electromagnets beyond a certain size cannot instantly flip polarity, and must instead have a short amount of time to either allow the flux to dissipate, or an excess amount of current to force the flux to change and still reach the desired levels of field strength. This magnetic flux dissipation can be compensated for in the control domain by allotting a higher than needed current to compensate for shunting the electromagnet, or by moving the activation time slightly forward to reach full power at the needed time. This particular problem may also be resolvable by using an array of small electromagnets with dissipation times that are trivial with respect to the operational frequency.

We are currently working on making a small 1D rocking motion prototype that will help to show the actual relations between many of the project's physical parameters. This model should help to define how large some of the electromagnetic response time problems will be, as well as aid in the creation of a map of the forces that the electromagnet pair are able to produce at different locations and how strongly they are able to influence the center rockers precise location. This test model should allow more refined exploration into the overall feasibility as well as the control requirements of the electromagnetic research option.

CONCLUSION

Table 2: Performance Summary

	Requirement	Disk-Rocker	Modified Four-Bar	Linear Shaft
Flap	120°	140°	93°	120°
Sweep	80°	77°	93°	81°
Twist	60° (active or passive)	Passive	Passive	60°
Frequency	15 Hz	15 Hz	15 Hz	15 Hz
Pros/Cons			Hovering Motion	Trades mechanics for controls

The two primary concepts researched and prototyped in the completion of this effort were the disk-rocker mechanism and the Modified Four-Bar Mechanism. testing of the prototypes against the specified requirements are shown in the first and second columns of Conclusion

Table 2, respectively. As the table shows, the modified four-bar design was unable to successfully demonstrate the flap requirement of 120 degrees and the Disk-Rocker design was unable to successfully demonstrate the sweep requirement of 80 degrees. The Linear Shaft design was not physically prototyped as part of this research effort, however, virtual prototyping demonstrated the capability to achieve the results shown above for the wing flap, sweep and twist ranges of motion. The frequency of the prescribed flapping/sweeping motion was proven to be highly dependent on the material characteristics of the rapid-prototyped material. The material used for the prototypes was extremely rigid and, therefore, very susceptible to fracture under even the lightest loads at elevated frequencies. As a result, the low frequencies used for proof-of-concept using the brittle prototypes were extrapolated using known properties of improved fracture-tough prototyping materials to obtain the required 15 Hz frequencies.

ACKNOWLEDGMENTS

This work is partially supported by a grant from the Air Force Research Labs (AFRL/RB, Wright Patterson Air Force Base) and, in part, by the University of Texas at Austin Cockrell School of Engineering and the Cullen Trust Endowed Professorship in Engineering No. 1. Particular thanks go to Dr Greg Reich, Capt Robert Walker and Major Greg Parker at AFRL/RB. In addition, we acknowledge the support of the Department of Engineering Mechanics at the U.S. Air Force Academy as well as the financial support of the Dean's Assessment Funding Program. Any opinions, findings, or recommendations are those of the authors and do not necessarily reflect the views of the sponsors.

REFERENCES

1. Hagiwara, S., Chichibu, S., and Simpson, N.,' Neuromuscular mechanisms of wing beat in hummingbirds, Journal of Comparative Physiology A: Neuroethology, Sensory, Neural, and Behavioral Physiology, Springer Berlin / Heidelberg, Volume 60, Number 2 / June, 1968.
2. Greenewalt, C., Hummingbirds, Dover Publishers, 1991.
3. Hummingbird Wing Tip Motion, http://www.ae.utexas.edu/design/humm_mav/Image32.gif .

4. Mueller, T., Editor, Fixed and Flapping Wing Aerodynamics for Micro Air Vehicle Applications, AIAA Publications, Volume 165, 2001.
5. Otto, K., Wood, K., Product Design: Techniques in Reverse Engineering and New Product Development, Prentice Hall, 2001.
6. Mullen, B., C. Johnson, and E. Salas," Productivity Loss in Brainstorming Groups: A Meta-Analytic Integration", *Basic and Applied Social Psychology* Vol. 12, No. 1, pp. 3-23, 1991.
7. Single DOF Ornithopter Mechanism, http://www.symscape.com/files/images/mav-ornithopter.jpg .